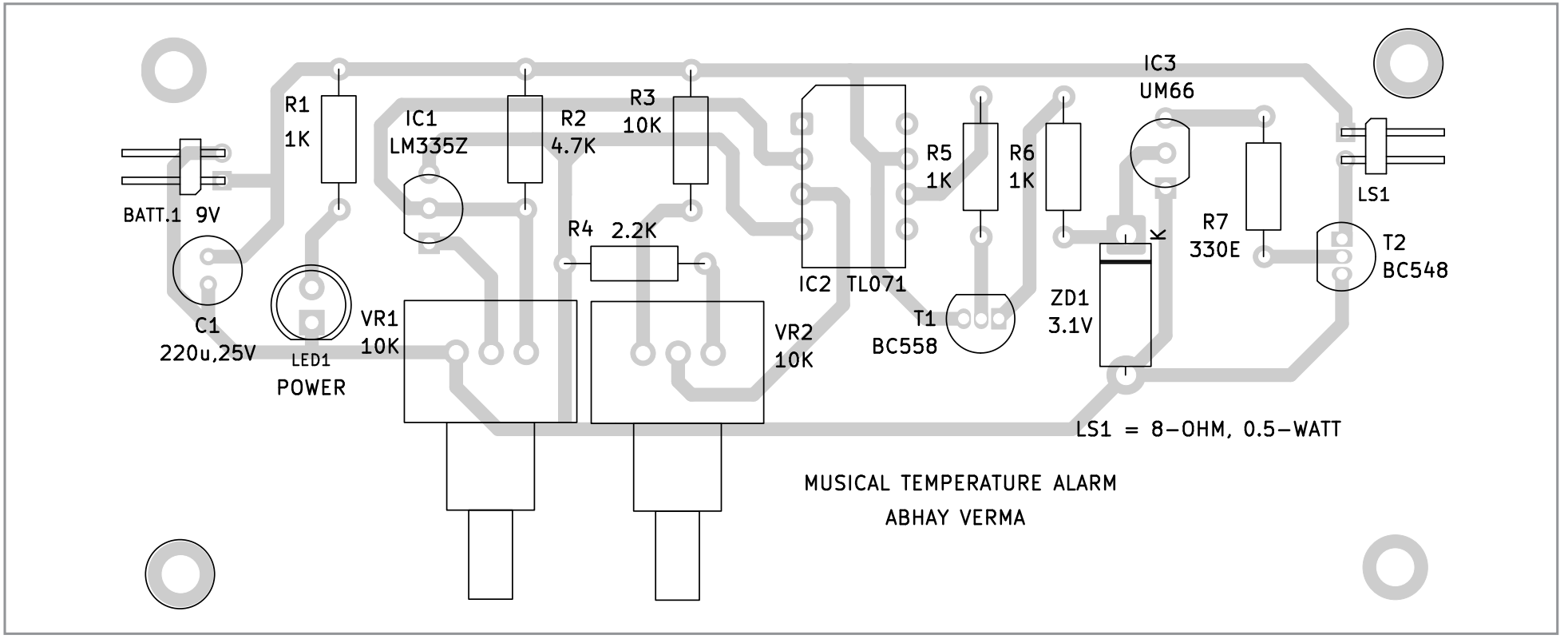

Fig. 4: Component side of the PCB